Feuille de données LB-480-51/52

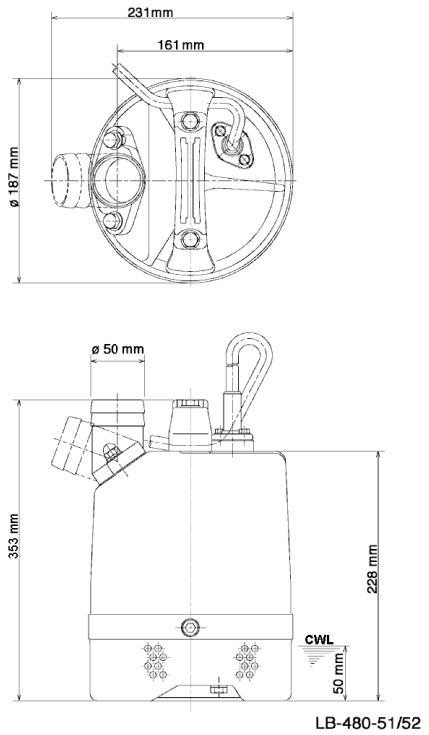

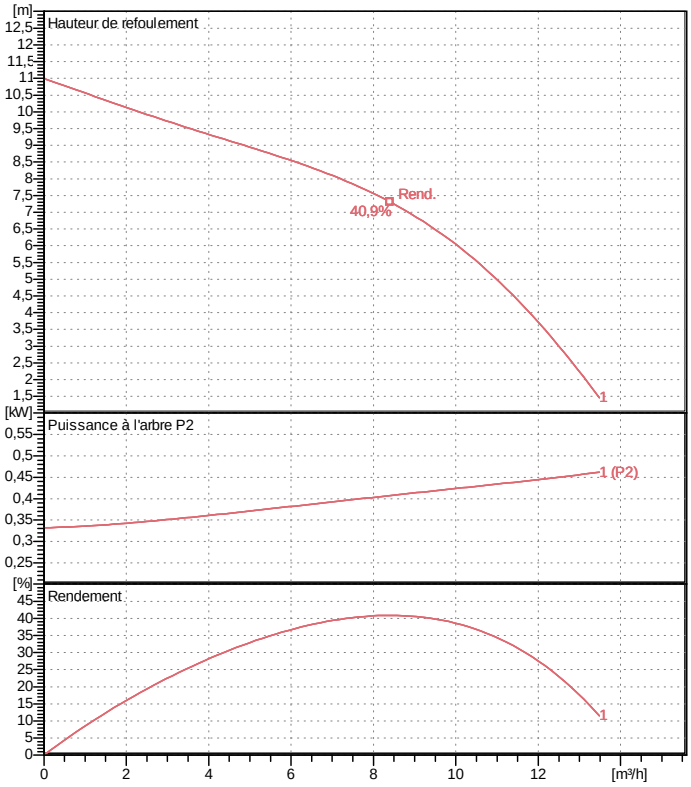

CWL: Continuous running water level

Specification

Electric submersible pump

Indice de protection	IP 68
Depth of submersion	max. 10 m
Type of impeller	semi-vortex
Max. solid handling	6 mm

Suitable for:
spring-/rain-/font water, water containing sand

Electric motor

Dry-type submersible induction motor

Classe d'isolation E	2Pôles 2610 1/min
Mode de démarrage	Direct
Tension nominale	230 V 50 Hz 1~
Absorption de puissance	0,59 kW
Puissance nominale	0,48 kW
Intensité nominale	2,9 A
Start current	6,8 A

Cable

10m H07RN-F 3Cx1mm²

Motor Protection

Circle thermal protector
(snap-action bi-metal device)

Garniture d'arbre

Double inside mechanical seal in oil bath
additional lubrication by oil lifting device

Primary seal
Silicon carbide on silicon carbide
Secondary seal
Carbon on ceramic

Bearings

Shielded ball bearings, maintenance-free

Materials

Roue	Urethane rubber
Pompe boîte	Polypropylene / polyethylene
Motor Frame	Aluminium die casting
Shaft	SUS403 (EN-X6Cr13)

Bride de refoulement

2” (50mm) BS-Coupling (threaded flange)

Weight

10,4 kg (dry weight of the pump only without cable)

Heltorfer Str. 14 * 40472 Düsseldorf * Germany
Tel.: +49-211-4179373 sales@tsurumi.eu
Fax: +49-211-417937-480 www.tsurumi.eu

courbe de puissance
LB-480-51/52

Refoulement	2"
Hauteur de refoulement	11,0 m
Débit	13,5 m³/h
Puissance nominale	0,48 kW
Puissance absorbée	0,59 kW
Phases	1~
Tensions	230 V
Fréquence	50 Hz
Intensité nominale	2,9 A
Intensité de démarrage	6,79 A
Nombre de pôles	2
Vitesse	2610 1/min
Mode de démarrage	Direct
Classe d'isolation	E

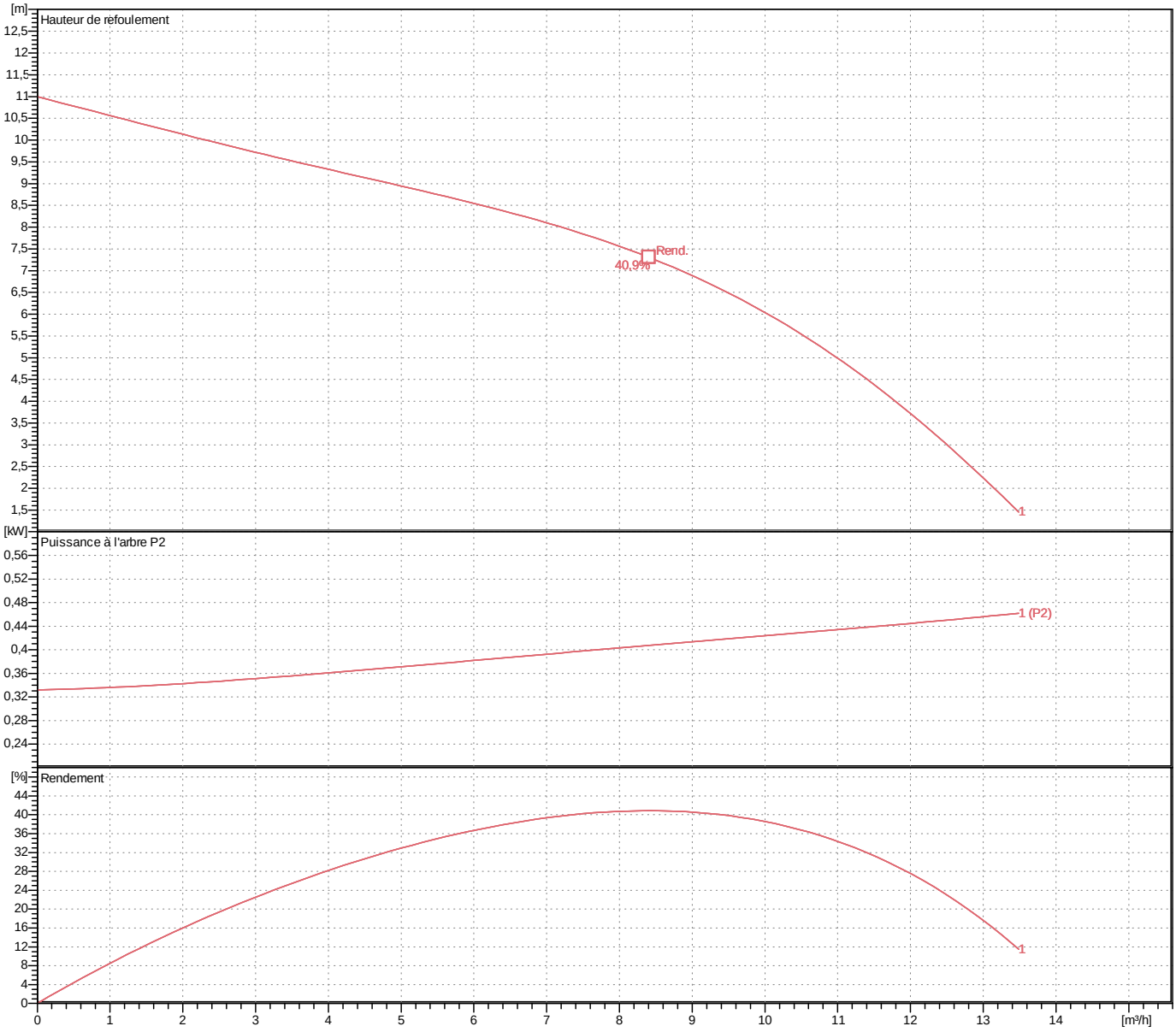

Heltorfer Str. 14 * 40472 Düsseldorf * Germany
Tel.: +49-211-4179373 sales@tsurumi.eu
Fax: +49-211-417937-480 www.tsurumi.eu

Dimensions
LB-480-51/52

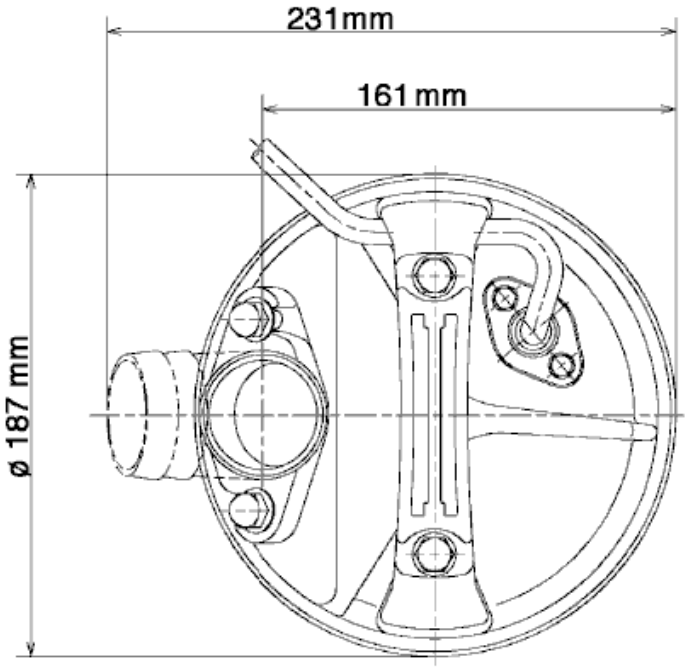

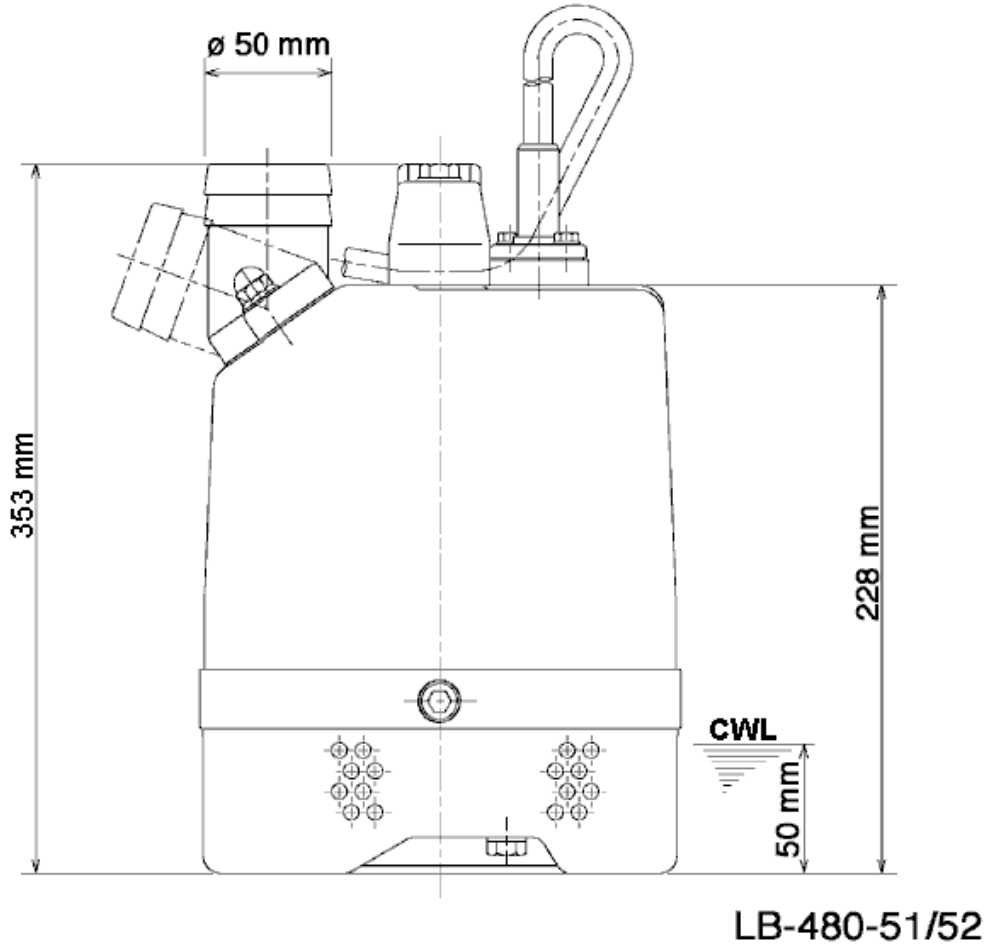

CWL: Continuous running water level
LWL: Lowest running water level

Sectional drawing
LB-480-51/52

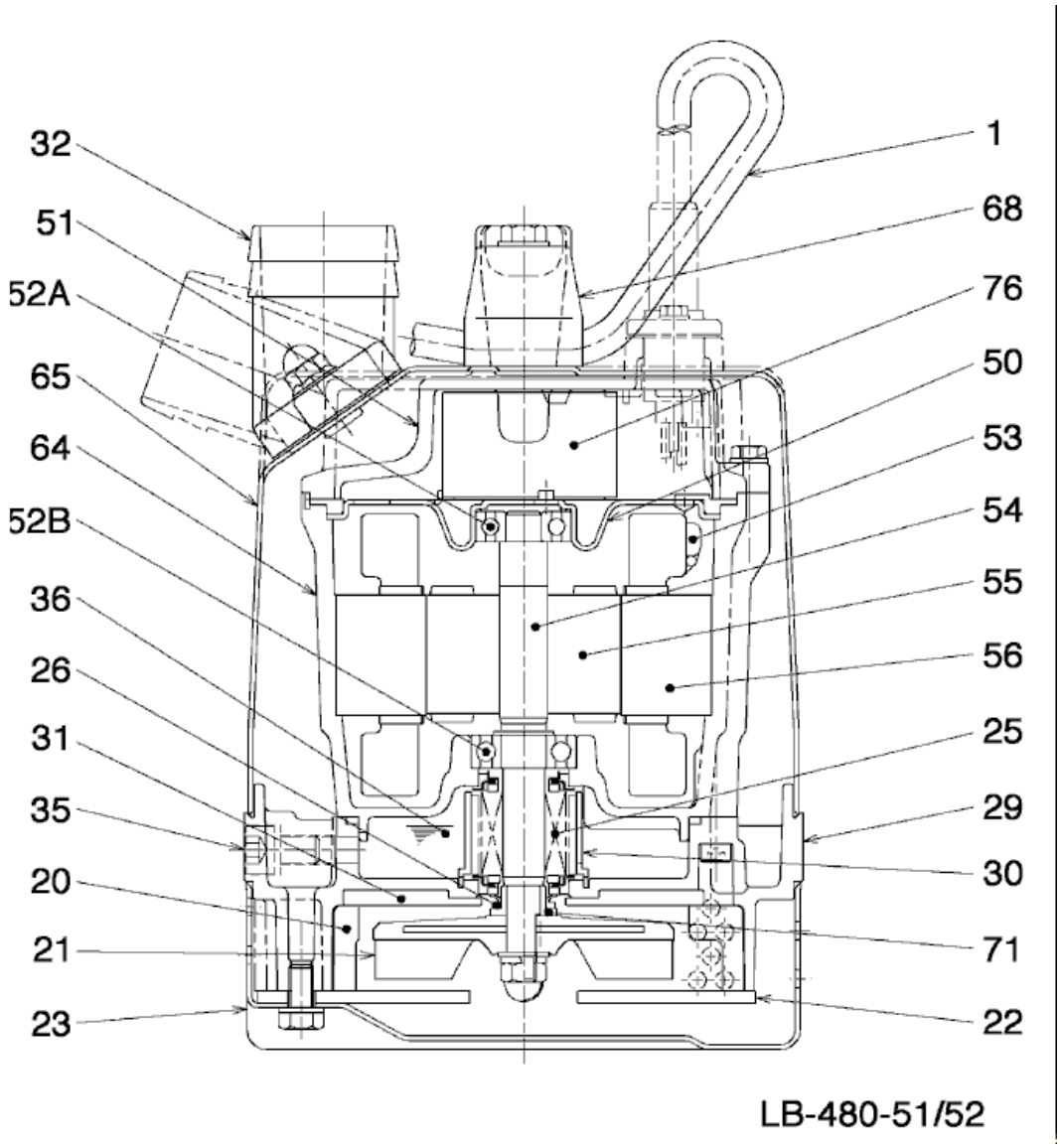

N°.	Désignation	Remarque	N°.	Désignation	Remarque
1	Cable	H07RN-F	52B	Lower bearing	6202ZZC3
20	Pompe boîte	Polypropylene / polyethylene	53	Miniature protector	.
21	Roue	Urethane rubber	54	Shaft	SUS403 (EN-X6Cr13)
22	Suction cover	Steel plate	55	Rotor	.
23	Strainer	Steel plate	56	Stator	.
25	Mechanical seal	W-14VL	64	Motor Frame	Aluminium die casting
26	V-ring	Butadiene-acrylonitrile-rubber	65	Outer Cover	Steel plate
29	Oil casing	Aluminium alloy casting	68	Handle	Steelplate and rubber
30	Oil distributor	Matière plastique	71	Manchon protecteur arbre	SUS304 (EN-X5CrNi18-10)
31	Attrition plate	Polypropylene / polyethylene	76	Condenser	.
32	Discharge coupling	Aluminium die casting			
35	Oil screw	SUS304 (EN-X5CrNi18-10)			
36	Lubricant	Turbine oil (ISO VG32)			
50	Motor cover	Steel plate			
51	Main cover	Aluminium die casting			
52A	Upper bearing	6201ZZC3			

Heltorfer Str. 14 * 40472 Düsseldorf * Germany
Tel.: +49-211-4179373 sales@tsurumi.eu
Fax: +49-211-417937-480 www.tsurumi.eu